SPECIFICATION

50Hz

Rev. I

PUMP		
Liquid Handled	Type of liquid	Clean water
	Temperature [°C]	min. -5 max. 60 (CDX 70/05-70/07-90/10) max. 90 max. 110 (H-HS-HW-HSW)
Maximum working pressure [MPa]		0.8
Construction	Impeller	Closed centrifugal type
	Shaft seal type	Mechanical seal
	Bearing	Sealed ball bearing
Pipe Connection	Suction	G 1¼ (G 1½ CDX200)
	Discharge	G 1
Material	Casing	AISI 304
	Impeller	AISI 304
	Casing cover	AISI 304
	Shaft seal	Ceramic/Carbon/NBR (for CDX) Ceramic/Carbon/FPM (for CDXH) SiC/SiC/FPM (for CDXHS) Tungsten Carbide/Tungsten Carbide/FPM (for CDXHW) SiC/Tungsten Carbide/FPM (for CDXHSW)
	Shaft	AISI 303 (Wet extension)
	Bracket	Aluminium
Applicable standard of test		ISO 9906 – Annex A

MOTOR			
Type		Electric - TEFC	
		Single Phase	Three Phase
Efficiency level (Reg. 640/2009)		-	- from 0.37 kW up to 0.55 kW IE2 from 0.75 kW up to 1.8 kW
No. of Poles		2	
Rotation speed	[min^{-1}]	≈ 2800	
Insulation Class		F	
Protection degree (CEI EN 60034-5)		IP 55	
Power rating	[kW]	0.37 ÷ 1.5	0.37 ÷ 1.8
	[HP]	0.5 ÷ 2	0.5 ÷ 2.5
Frequency	[Hz]	50	
Voltage	[V]	230 ±10%	230/400 ±10%
Capacitor		Built in	-
Over load protection		Built in	Provided by the user
Casing material		Aluminium	
Base material/motor support		Aluminium	
Dimensions of cable entry		PG11 - PG13.5 (see dimensions page 400)	

SELECTION CHART

50Hz

Rev. I

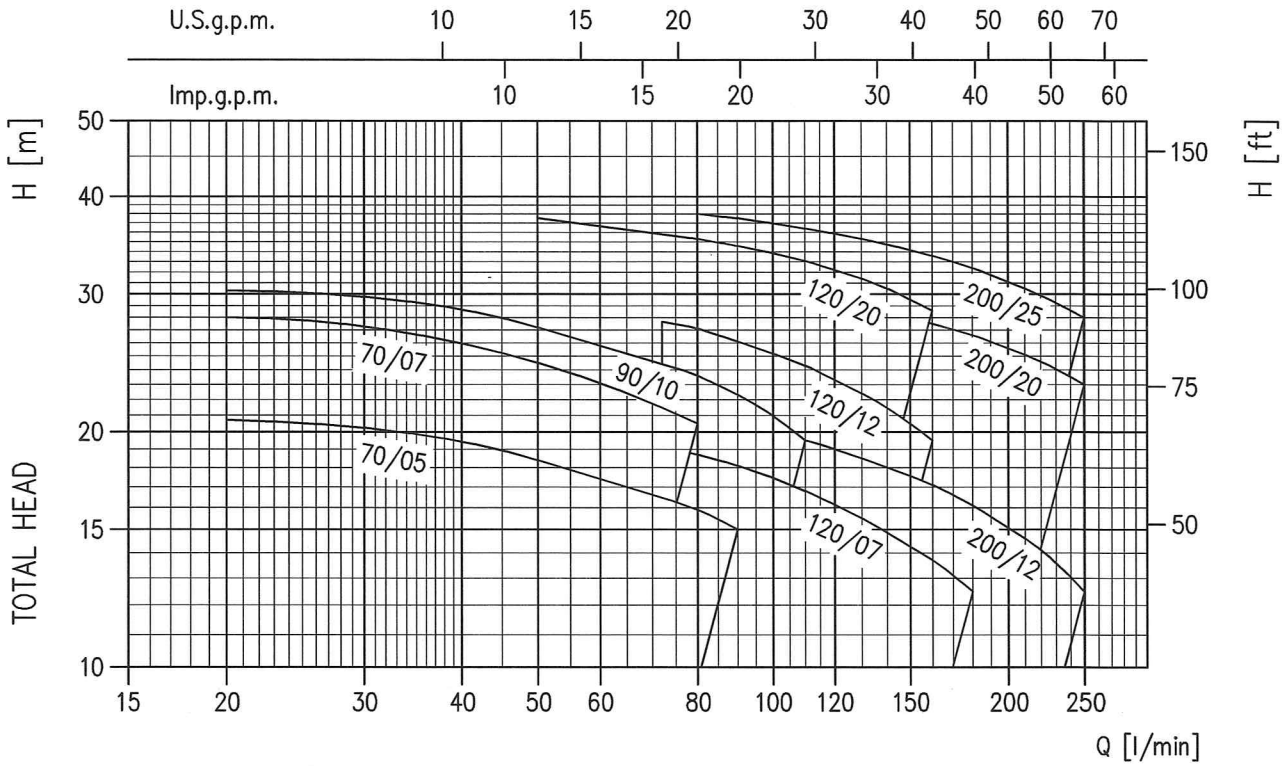

Pump type		Power		Q=Capacity										
				l/min	0	20	50	80	90	110	130	160	180	210	250
				m³/h	0	1.2	3	4.8	5.4	6.6	7.8	9.6	10.8	12.6	15
Single Phase	Three Phase	[kW]	[HP]	H=Total manometric head in meters											
CDXM 70/05	CDX 70/05	0.37	0.5		22	20.7	18.4	15.9	15	-	-	-	-	-	-
CDXM 70/07	CDX 70/07	0.55	0.8		30	28	24.5	20.5	-	-	-	-	-	-	-
CDXM 90/10	CDX 90/10	0.75	1		32	30.3	27.2	23.6	22.3	19.5	-	-	-	-	-
CDXM 120/07	CDX 120/07	0.55	0.8		22.5	-	20.5	18.7	18.1	16.8	15.5	13.7	12.5	-	-
CDXM 120/12	CDX 120/12	0.9	1.2		32	-	29.5	27.1	26.1	24.3	22.4	19.5	-	-	-
CDXM 120/20	CDX 120/20	1.5	2		40.5	-	37.5	35.3	34.6	33.1	31.4	28.6	-	-	-
CDXM 200/12	CDX 200/12	0.9	1.2		23	-	-	20.7	20.2	19.5	18.5	17.1	16.1	14.6	12.5
CDXM 200/20	CDX 200/20	1.5	2		34	-	-	31	30.6	29.7	28.9	27.5	26.6	25.1	23
-	CDX 200/25	1.8	2.5		41	-	-	38	37.5	36.4	35.3	33.6	32.4	30.5	28

DIMENSIONS AND WEIGHT

50Hz

Rev. I

PUMP

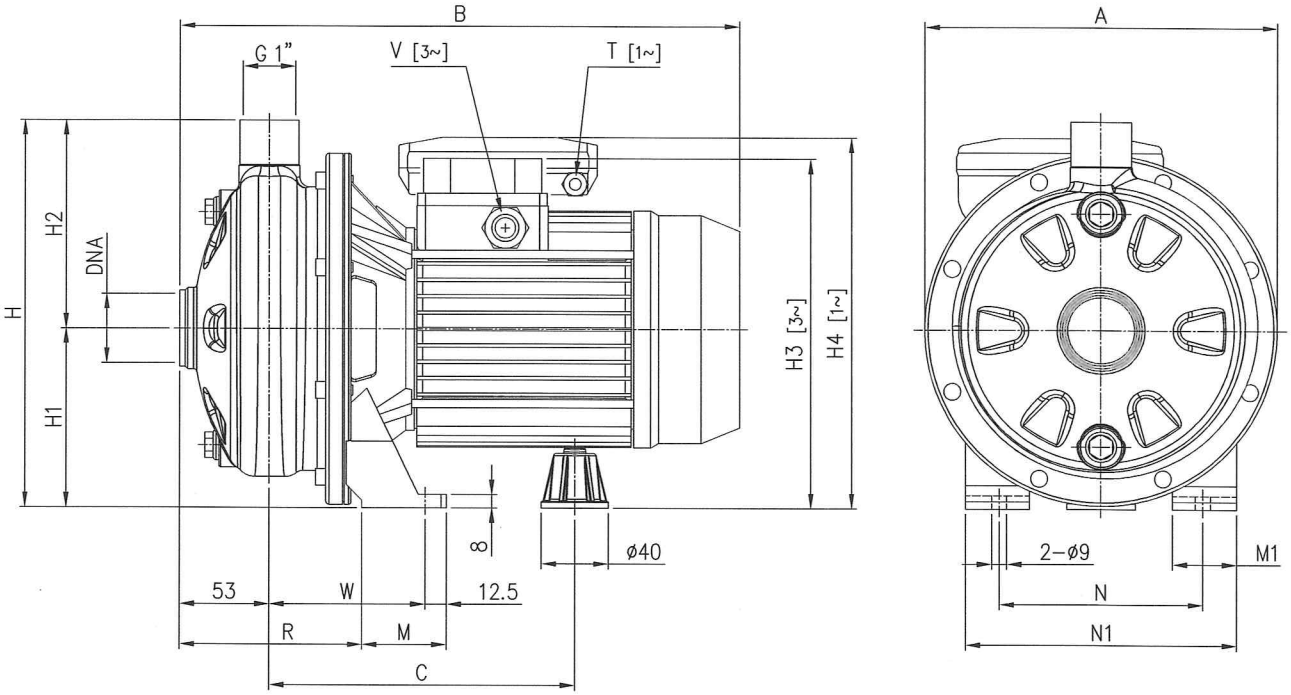

Pump type CDXM CDX	Dimensions [mm]																		Weight [kgf]	
	A	B [1~]	B [3~]	C	H	H1	H2	H3 [3~]	H4 [1~]	M	M1	N	N1	R	T [1~]	V [3~]	W	DNA	[1~]	[3~]
70/05	208	321	320	181	229.5	106	123.5	207	216	50	38	120	160	108	PG11	PG11	92.5	G1 1/4	8.3	8.3
70/07	208	321	320	181	229.5	106	123.5	207	216	50	38	120	160	108	PG11	PG11	92.5	G1 1/4	9.8	9.7
90/10	208	321	320	181	229.5	106	123.5	207	216	50	38	120	160	108	PG11	PG11	92.5	G1 1/4	11	11
120/07	208	321	320	181	229.5	106	123.5	207	216	50	38	120	160	108	PG11	PG11	92.5	G1 1/4	9.6	9.5
120/12	208	321	332	181	229.5	106	123.5	207	235	50	38	120	160	108	PG11	PG11	92.5	G1 1/4	11.8	12.4
120/20	232	346.5	359	198.5	250	118	132	237	248.5	55	40	140	180	105.5	PG13.5	PG11	95	G1 1/4	16.5	17.2
200/12	208	321	332	181	229.5	106	123.5	207	235	50	38	120	160	108	PG13.5	PG11	92.5	G1 1/2	11.4	12.2
200/20	208	346.5	359	198.5	229.5	106	123.5	225	236.5	55	40	140	180	105.5	PG13.5	PG11	95	G1 1/2	15.3	16.1
200/25	232	-	359	198.5	250	118	132	237	-	55	40	140	180	105.5	-	PG11	95	G1 1/2	-	15.9

[1~] Single phase
[3~] Three phase